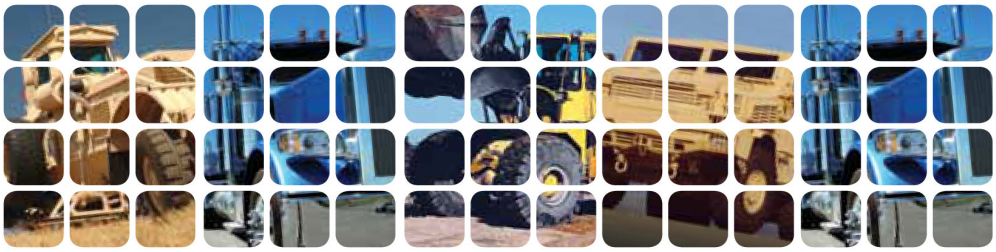

AxleTech International
A GENERAL DYNAMICS COMPANY

Planetary Rigid Axles

PRLC1735 (82K lbs / 37.2 t)

OVERVIEW

The AxleTech International PRLC1735 series planetary rigid axle is engineered to meet the increasing powerful demands of the heavy-duty multiple vocation markets. With a capacity up to 82,000 lbs. (37,200 kgs.), this axle covers a broad range of vocations including railcar movers, airport refuelers, truck cranes, log handlers, and fertilizer spreaders.

The PRC1735 planetary rigid axle offers a wide selection of gear ratios, load capacities and brakes for performance characteristics tailored to your needs.

Engineered for compatibility with demanding traction conditions, the PRLC1735 meets the trend of increased driveline torques, tire sizes, and loading requirements and provides ruggedness for prolonged life. A limited slip differential with a 2.0 bias ratio, driver controlled differential lock (DCDL), and NoSPIN® are all available for improved traction in unique vocational requirements.

The PRLC1735 design helps reduce OEM end-user maintenance costs. A standard unitized input pinion seal reduces the likelihood of oil leaks. Extra axle housing magnets are optional to help reduce metallic contamination between scheduled lubricant change intervals.

Options include wheel mounted hydraulic caliper disc or "S" cam brakes. Failsafe brake chambers are also an available option when "S" cam brakes are specified.

AxleTech International's planetary rigid axles are tough, dependable and thoroughly proven under the most severe conditions.

AxleTech International is the former Rockwell® Off Highway and European Specialty Products Group.

SPECIFICATIONS

AXLE CAPACITY(1) Pounds (kg)	AVAILABLE DIFFERENTIALS	DIFFERENTIAL RING GEAR DIAMETER AND FACE WIDTH Inches (mm)	AVAILABLE OVERALL RATIOS
Railcar Mover 82,000 (37,200) Airport Refueler 52,500 (23,800) Truck Crane 35,000 (15,900) Log Hauler 35,000 (15,900) Fertilizer Spreader 54,000 (24,500)	Standard, Limited Slip, NoSPIN®, Driver Controlled Differential Lock (DCDL)	RS145 Series 15.31" (388.9) 2.06" (52.3)	10.5 - 30.36:1.0

A AXLE MOUNTING CENTERS Inches (mm)	B HUB FLANGE TO FLANGE Inches (mm)	TIRE SIZE Inches (mm)	BRAKES Inches (mm)	INPUT BOX RATIO
	HDB Brakes 59.8" (1,519mm) 101.32" (2,574mm) "S" Cam Brakes 96.19" (2,443mm) 98.48" (2,501.4 mm)	24" (610) 73 x 44 (1,854 x 1,118)	18.5" x 0.63" HDB (470 x 16) 16.5" x 7.0" "S" Cam (419 x 178) 20.25" x 7 "S" Cam (514 x 178)	3.60:1.0 4.235:1.0

(1) Approval required on all applications.

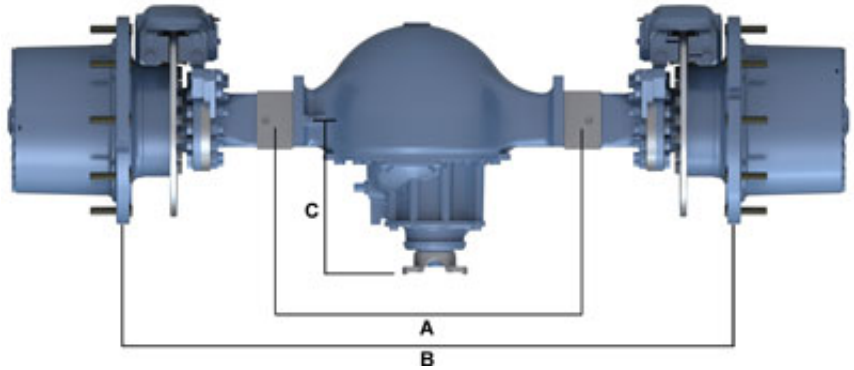

EXAMPLE: TYPICAL AXLE WEIGHT
PRLC1735 with 98.5" (2,502 mm)
Hub Flange to Flange "S" Brakes = 3,050 lbs. (1,384 kg.)
PRLC1735 W3H with 59.8" (1,519 mm)
Hub Flange to Flange
with HDB brakes = 1,950 lbs. (885 kg.)

TYPICAL GUIDE OIL CAPACITY:
Carrier 62 pints (29.5 liters)
Wheel end 18 pints (8.6 liters) each

A) Axle Mounting Centers
B) Hub Flange to Flange
C) Carrier Standout with 72N tapped yoke = 14.56 (370 mm)

Optional with 92N yoke = 15.0" (381 mm)

FEATURES & BENEFITS

FEATURES	BENEFITS
Choice of hydraulic dry disk or "S" cam brakes	Provides brake flexibility for installation
Wheel mounted "S" cam brakes available as option	Easy brakes to service, high capacity brakes for lower maintenance costs and minimized downtime
Failsafe air chambers available on "S" cam brakes	Provides option of parking at drive wheels
High capacity hypoid gearing	Greater torque capacity than spiral bevel gearing
Wide range of overall axle ratios	Match OEM vocational requirements
Unitized input pinion seal standard	Minimizes potential for oil leaks and improves axle sealing protection
Supplemental axle magnets optional in axle housing	Reduces metallic contamination between lubrication change intervals
Multiple axle lengths available	Provides options for vehicle installations
Thrust screw standard in carrier	Provides ring gear support in high torque applications
Limited slip differential optional (3.42 - 7.17 ratios only)	Available for improved traction in unique vocational requirements

AxleTech International
1400 Rochester Road
Troy, Michigan 48083 USA
1-877-877-9717
Fax: 1-248-435-1990

AxleTech International SAS
4, Rue Jean Servanton
Boite Postale 656
42042 Saint Etienne Cedex 1
FRANCE
+33 477-92-88-00
Fax: +33 477-92-88-93

AxleTech do Brasil Sistemas Automotivos Ltda.
Av. Marechal Rondon, 840
Osasco - SP - 06093-010
BRASIL
+55 11 3653-1420
Fax: +55 11 3653-1424

AxleTech Troy Distribution Center
1400 Rochester Road
Troy, Michigan 48083 USA
1-877-877-9717
Fax: 1-248-435-1990

www.axletech.com

© Copyright AxleTech International 2011
AxleTech is a trademark of AxleTech International® and sells through market-focused companies that are separate legal entities from Rockwell International and Meritor Technology, Inc. (who is the owner of the Meritor® and ArvinMeritor® marks. Tracing its heritage back to Rockwell International, AxleTech today operates as a strategic business unit within General Dynamics Corporation.