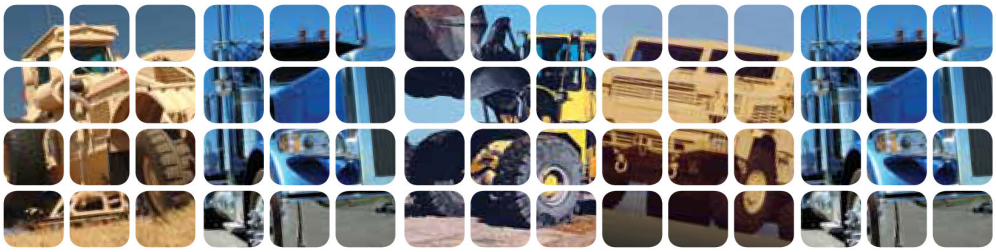

AxleTech International
A GENERAL DYNAMICS COMPANY

Planetary Rigid Axles

PRLC3804 (150K lbs / 68 t)

OVERVIEW

The AxleTech PRLC3804 series axle is engineered to meet the increasing powerful demands of the heavy-duty industrial solid tire lift truck market. With a capacity range up to 150,000 lbs. (68,000 kg.), this axle covers a broad range of lift truck applications. The PRLC3804 planetary rigid axles offer a wide selection of gear ratios, load capacities, and brakes for performance characteristics tailored to your needs.

Engineered for compatibility with demanding traction conditions, the PRLC3804 meets the trend of increased driveline torque, tire sizes and loading requirements and provides ruggedness for prolonged use and life. A DCDL (Drive Controlled Differential Lock), NoSPIN® and limited slip differential are also available for improved traction vocation requirements.The PRLC3804 design helps reduce OEM/end-user maintenance costs. A standard unitized seal reduces the likelihood of oil leaks. Extra housing magnets are optional, to help reduce metallic contamination between scheduled lubricant change intervals.

AxleTech planetary rigid axles are tough, dependable, and thoroughly proven under the most severe conditions.

AxleTech International is the former Rockwell® Off Highway and European Specialty Products Group.

SPECIFICATIONS

AXLE CAPACITY(1) Pounds (kg)	AVAILABLE DIFFERENTIALS	DIFFERENTIAL RING GEAR DIAMETER AND FACE WIDTH Inches (mm)	AVAILABLE OVERALL RATIOS
Lift Truck 150,000 (68,100)	Standard, DCDL, NoSPIN®, or Limited Slip Differential	RS145 Series 15.31" (388.9) 2.06" (52.3)	15.2 - 37.3

A AXLE MOUNTING CENTERS Inches (mm)	B HUB FLANGE TO FLANGE(2) Inches (mm)	TIRE SIZE Inches (mm)	BRAKES Inches (mm)	PLANETARY WHEEL END RATIO
15.3" (387)	88.1" (2,238)	36" x 28" x 30" (914 x 711 x 762)	17.0 W4H (432)	5.2:1.0

(1) Approval required on all applications.
(2) Other dimensions available.

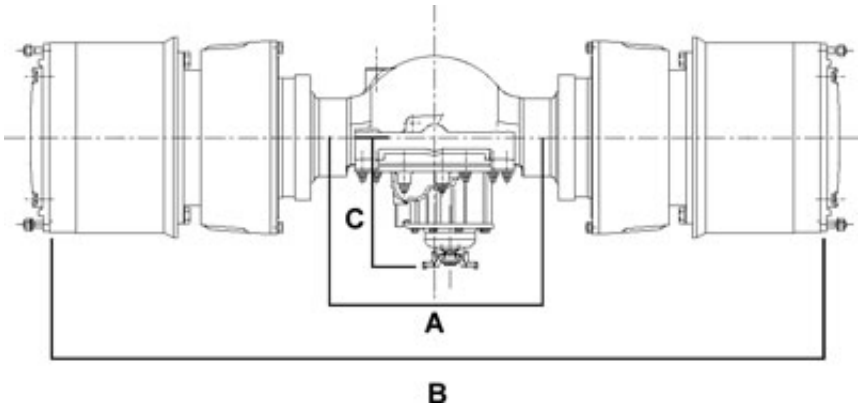

EXAMPLE: TYPICAL AXLE WEIGHT
PRLC3804 with 88.1" (2,238 mm) hub flange to flange with
17" W4H brake = 4,000 lbs. (1816 kg)

OIL CAPACITY: (ESTIMATED)
Carrier 24 pints (11.3 liters)
Wheel end 14 pints (6.6 liters) each

A) Axle Mounting Centers
B) Hub Flange to Flange
C) Carrier Standout With 72N Input Yoke 14.50" (368.3)

FEATURES & BENEFITS

FEATURES	BENEFITS
Unitized input pinion seal standard	Minimizes potential for oil leaks and improved axle sealing protection
Wet disc brakes	Sealed environment protects against contaminants for optimal brake performance in severe conditions
High-capacity hypoid gearing	Greater torque capability than spiral bevel gearing
Wide axle ratio range	Match customer vocation requirements
Thrust screw in carrier	Provides ring gear support in high torque loadings
Supplemental axle magnets optional in axle housing	Reduced metallic contamination between lubrication change intervals
DCDL, NoSPIN®, or limited slip differential optional	Provides for improved traction in severe vocations

AxleTech International
1400 Rochester Road
Troy, Michigan 48083 USA
1-877-877-9717
Fax: 1-248-435-1990

AxleTech International SAS
4, Rue Jean Servanton
Boite Postale 656
42042 Saint Etienne Cedex 1
FRANCE
+33 477-92-88-00
Fax: +33 477-92-88-93

AxleTech do Brasil Sistemas Automotivos Ltda.
Av. Marechal Rondon, 840
Osasco - SP - 06093-010
BRASIL
+55 11 3653-1420
Fax: +55 11 3653-1424

AxleTech Troy Distribution Center
1400 Rochester Road
Troy, Michigan 48083 USA
1-877-877-9717
Fax: 1-248-435-1990

www.axletech.com

© Copyright AxleTech International 2011
AxleTech is a trademark of AxleTech International® and sells through market-focused companies that are separate legal entities from Rockwell International and Meritor Technology, Inc. (who is the owner of the Meritor® and ArvinMeritor® marks. Tracing its heritage back to Rockwell International, AxleTech today operates as a strategic business unit within General Dynamics Corporation.