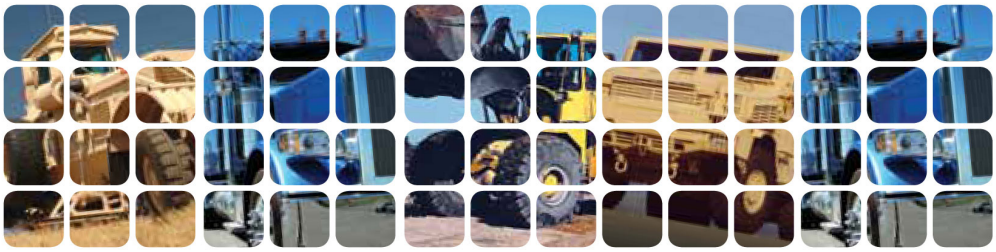

AxleTech International
A GENERAL DYNAMICS COMPANY

Planetary Steer Axles

PSC1794 (58K lbs / 26.3 t)

OVERVIEW

The AxleTech International PSC1794 series planetary steer axle is engineered to meet the increasing powerful demands of the heavy duty Rough Terrain Crane market vocations. With an axle capacity range up to 58,000 lbs. (26,300 kg.), this axle has the capacity for the larger R.T. Cranes vehicle vocational requirements.

The PSC1794 planetary steer axle series offers a wide selection of overall gear reduction options that can be tailored to your specific needs. Engineered for compatibility with demanding traction conditions, the PSC1794 meets the trend of increased driveline torque, tire sizes, and loading requirements that provide an extra ruggedness for prolonged life. A limited slip differential with a 2.0 bias ratio and NoSPIN® differential options are also available for improved traction vocational requirements.

The PSC1794 design helps reduce OEM/end-user maintenance costs. A standard input pinion unitized seal reduces the likelihood of oil leaks. Permanently lubricated steering axle shafts are standard; eliminating this maintenance requirement. Extra axle housing magnets are optional to help reduce any metallic contamination between scheduled lubricant change intervals. Wheel mounted dual hydraulic 4 piston caliper/wheel end Hydraulic Dry Disk are standard. Carrier input pinion mounted spring applied / hydraulic release park brake option is also available.

AxleTech International planetary steer axles are tough, dependable, and thoroughly proven under the most severe conditions.

AxleTech International is the former Rockwell® Off Highway and European Specialty Products Group.

SPECIFICATIONS

AXLE CAPACITY(1) Pounds (kg)	AVAILABLE DIFFERENTIALS	DIFFERENTIAL RING GEAR DIAMETER AND FACE WIDTH Inches (mm)	AVAILABLE OVERALL RATIOS
Rough Terrain Crane 58,000 (26,300)	Standard, Limited Slip Differential or NoSPIN®	RS145 Series 15.31" (388.9) 2.06" (52.3)	15.23 - 37.3:1.0

A AXLE MOUNTING CENTERS Inches (mm)	B HUB FLANGE TO FLANGE Inches (mm)	TIRE SIZE Inches (mm)	BRAKES Inches (mm)	PLANETARY WHEEL-END RATIO	D KING PIN INTERSECTION Inches (mm)
38.5" (978)	107.2" (2,723)	25" (635)	18.5" x .63" HDB (470 x 16)	5.20:1.0	79.0" (2,007)

(1) Approval required on all applications.

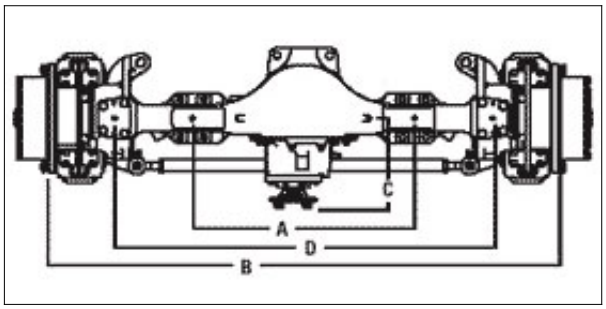

EXAMPLE: TYPICAL AXLE WEIGHT
PSC1794 with 107.2" (2,724 mm) hub flange to flange and HDB Brakes = 3,600 lbs. (1,633 kg)

OIL CAPACITY: (Estimated)
Carrier 52 pints (24.6 liters)
Wheel end 14 pints (6.6 liters) each

A) Axle Mounting Centers
B) Hub Flange to Flange
C) Carrier Standout with 72N Input Yoke 14.56" (369.8 mm)
D) King Pin Intersection
14.75" (374.7mm) with 85WB flange with 1270 Input Piston Mounted Spring Apply / Hydraulic Release Park Brake.

FEATURES & BENEFITS

FEATURES	BENEFITS
Unitized input pinion seal standard	Minimizes potential for oil leaks and improved axle sealing protection
High-capacity hypoid gearing	Greater torque capability than spiral bevel gearing
Dual Hydraulic 4 Piston Wheel End Standard on 18.5" (469.9mm) Rotor	Provides high service brake performance for OEM requirements

Wide axle ratio range	Match customer vocation requirements
Thrust screw in carrier standard	Provides ring gear support in high torque loadings
Straight tie rod standard	Provides additional protection from external damage
Cast integral steer cylinder mounting on axle housing bowl	Provides flexibility in OEM vehicle mounting
Supplemental axle magnets optional in axle housing	Reduced metallic contamination between lubrication change intervals
Limited slip differential optional	Provides for improved traction in severe vocations
Optional input mounted park brake available 1270 Spring Apply / Hydraulic Release Disk.	Provides optional vehicle parking on axle

AxleTech International
1400 Rochester Road
Troy, Michigan 48083 USA
1-877-877-9717
Fax: 1-248-435-1990

AxleTech International SAS
4, Rue Jean Servanton
Boite Postale 656
42042 Saint Etienne Cedex 1
FRANCE
+33 477-92-88-00
Fax: +33 477-92-88-93

AxleTech do Brasil Sistemas Automotivos Ltda.
Av. Marechal Rondon, 840
Osasco - SP - 06093-010
BRASIL
+55 11 3653-1420
Fax: +55 11 3653-1424

AxleTech Troy Distribution Center
1400 Rochester Road
Troy, Michigan 48083 USA
1-877-877-9717
Fax: 1-248-435-1990

www.axletech.com

© Copyright AxleTech International 2011
AxleTech is a trademark of AxleTech International® and sells through market-focused companies that are separate legal entities from Rockwell International and Meritor Technology, Inc. (who is the owner of the Meritor® and ArvinMeritor® marks. Tracing its heritage back to Rockwell International, AxleTech today operates as a strategic business unit within General Dynamics Corporation.